Solid State Devices, Inc.
14830 Valley View Blvd * La Mirada, Ca 90638
Phone: (562) 404-7855 * Fax: (562) 404-1773
ssdi@ssdi-power.com * www.ssdi-power.com

SDR3006 series

DESIGNER'S DATA SHEET

Part Number / Ordering Information [1/]

SDR30 __ __ __

- **Screening**
  - __ = Not Screened
  - TX = TX Level
  - TXV = TXV
  - S = S Level
- **Package**
  - M = TO-254
  - Z = TO-254Z
- **Configuration** n/a (ultrafast family)
- **Voltage**
  - 04 = 400 V
  - 05 = 500 V
  - 06 = 600 V

30A 80nsec
400 to 600 V
Ultrafast Rectifier

Features:

- **Ultrafast Recovery: 100nsec Maximum**
- **High Surge Rating**
- **Low Reverse Leakage Current**
- **Low Junction Capacitance**
- **Hermetically Sealed, Isolated Package providing enhanced thermal performance**
- **Eutectic Die Attach**
- **TX, TXV, and S Level Screening iaw MIL-PRF-19500 Available**
- **hyperfast version available as SDR3006HF**

Maximum Ratings		Symbol	Value	Units
Peak Repetitive Reverse Voltage	**SDR3004** **SDR3005** **SDR3006**	V_{RRM}	400 500 600	**Volts**
Average Rectified Forward Current (Resistive Load, 60 Hz Sine Wave, T_C = 100 °C)	Total	Io	30	**Amps**
Peak Surge Current (8.3 ms Pulse, Half Sine Wave, T_A = 25 °C)		I_{FSM}	500	**Amps**
Operating & Storage Temperature		T_{OP} & T_{STG}	-65 to +200	**ºC**
Maximum Total Thermal Resistance Junction to Case		$R_{\theta JC}$	1.2 (0.9 typ)	**ºC/W**

TO-254 (M)

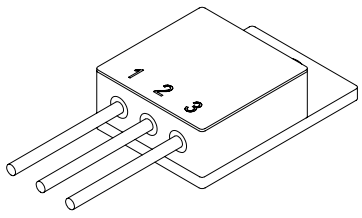

TO-254Z (Z)

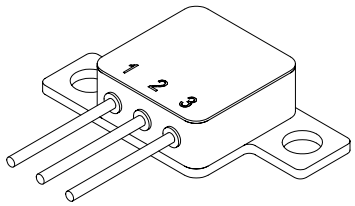

NOTE: All specifications are subject to change without notification.
SCD's for these devices should be reviewed by SSDI prior to release.

DATA SHEET #: RC0090A **DOC**

Solid State Devices, Inc.
14830 Valley View Blvd * La Mirada, Ca 90638
Phone: (562) 404-7855 * Fax: (562) 404-1773
ssdi@ssdi-power.com * www.ssdi-power.com

SDR3006 Series

Electrical Characteristic		Symbol	Min	Max	Units
Instantaneous Forward Voltage Drop (T_A = 25ºC, 300 – 500 µsec Pulse)	I_F = 15A I_F = 30 A	V_{F1} V_{F2}	—	1.20 1.40	V_{DC}
Instantaneous Forward Voltage Drop (I_F = 15A, 300 – 500 µsec Pulse)	T_A = -55 ºC T_A = 100 ºC	V_{F3} V_{F4}	—	1.30 1.10	V_{DC}
Reverse Leakage Current (100% of rated V_R, 300 µs pulse min.)	T_A = 25 ºC T_A = 100 ºC	I_{R1} I_{R2}	— —	25 2000	µA
Reverse Recovery Time (I_F = 0.5A, I_R = 1A, I_{RR} = 0.25A, T_A = 25ºC)		t_{RR}	—	80 (typ 65)	nsec
Junction Capacitance (V_R = 10V_{DC}, T_A = 25ºC, f = 1MHz)		C_J	—	120 (typ 85)	pF

NOTES:

1/ For Ordering Information, Price, and Availability Contact Factory.

Available Part Numbers:
SDR3004M, SDR3004Z
SDR3005M, SDR3005Z
SDR3006M, SDR3006Z

PIN ASSIGNMENT			
PACKAGE	**Pin 1**	**Pin 2**	**Pin 3**
TO-254 (M)	Cathode	Anode	Anode
TO-254Z (Z)	Cathode	Anode	Anode

TO-254:

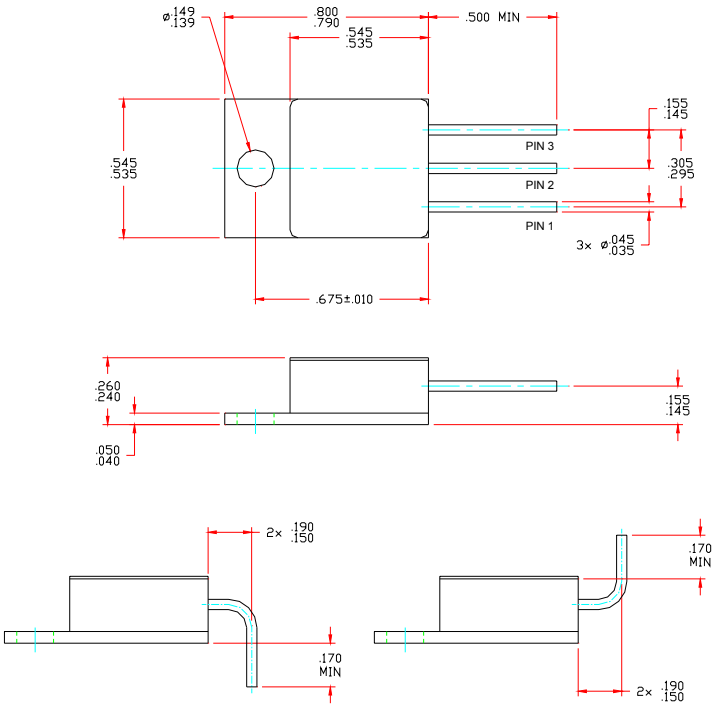
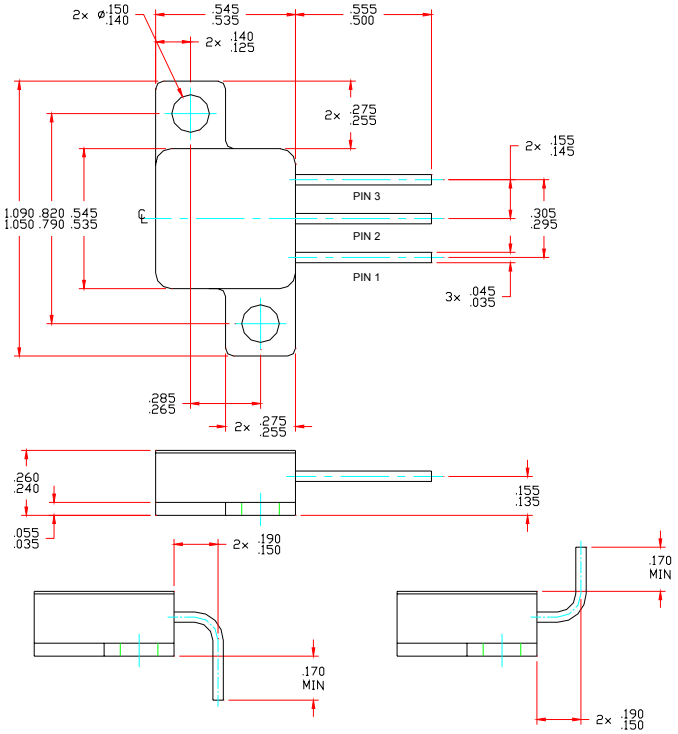
TO-254Z: