Solid State Devices, Inc.
14701 Firestone Blvd. * La Mirada, Ca 90638
Phone: (562) 404-4474 * Fax: (562) 404-1773
ssdi@ssdi-power.com * www.ssdi-power.com

SER70KB20 / SER70KE20
Series

Designer's Data Sheet

Part Number / Ordering Information 1/

SER70 __ 20 __

- **Screening**[2/] = None, TX = TX Level, TXV = TXV Level, S = S Level
- **Voltage**: 10 = 100 V, 15 = 150 V, 20 = 200 V
- **Configuration**: KB = without lead, KE = with lead

70 AMP
ULTRAFAST POWER
SURFACE MOUNT RECTIFIER
100 - 200 Volts, 50 ns

FEATURES:

- Low Reverse Leakage
- Low Forward Voltage Drop
- Surface Mount Version of 1N6306
- Hermetically Sealed Power Surface Mount Package
- TX, TXV, and Space Level Screening Available[2/]

MAXIMUM RATINGS		Symbol	Value	Units
Peak Repetitive Reverse Voltage and DC Blocking Voltage	SER70KE10, SER70KB10 SER70KE15, SER70KB15 SER70KE20, SER70KB20	V_{RRM} V_{RWM} V_R	100 150 200	**V**
Average Rectified Forward Current (Resistive Load, 60 Hz, Sine Wave, T_A = 100°C)		I_O	70	**A**
Peak Surge Current (8.3 ms Pulse, Half Sine Wave, I_O = 0, T_A = 25°C)		I_{FSM}	450	**A**
Operating and Storage Temperature		T_{OP} & T_{stg}	-55 to +200	**°C**
Maximum Thermal Resistance (Junction to Case)		$R_{\theta JC}$	1.2	**°C/W**

NOTES:

1/ For ordering information, price, operating curves, and availability – contact factory.

2/ Screening based on MIL-PRF-19500. Screening flows available on request.

Sedpack 2
(dime used for size reference)

Solid State Devices, Inc.
14701 Firestone Blvd. * La Mirada, Ca 90638
Phone: (562) 404-4474 * Fax: (562) 404-1773
ssdi@ssdi-power.com * www.ssdi-power.com

SER70KB20 / SER70KE20
Series

ELECTRICAL CHARACTERISTICS		Symbol	Typical	Maximum	Unit
Instantaneous Forward Voltage Drop (I_F = 5 A, 300 µs Pulse)	T_A = -55°C	V_{F1a}	850	-	**mV_{DC}**
	T_A = 25°C	V_{F1b}	720	800	
	T_A = 100°C	V_{F1c}	605	-	
	T_A = 125°C	V_{F1d}	565	-	
	T_A = 150°C	V_{F1e}	530	-	
Instantaneous Forward Voltage Drop (I_F =10 A_{DC}, 300 µs Pulse)	T_A = -55°C	V_{F2a}	885	-	**mV_{DC}**
	T_A = 25°C	V_{F2b}	760	840	
	T_A = 100°C	V_{F2c}	650	-	
	T_A = 125°C	V_{F2d}	615	700	
	T_A = 150°C	V_{F2e}	580	-	
Instantaneous Forward Voltage Drop (I_F =20 A_{DC}, 300 µs Pulse)	T_A = -55°C	V_{F3a}	920	-	**mV_{DC}**
	T_A = 25°C	V_{F3b}	810	890	
	T_A = 100°C	V_{F3c}	710	-	
	T_A = 125°C	V_{F3d}	670	-	
	T_A = 150°C	V_{F3e}	640	-	
Instantaneous Forward Voltage Drop (I_F =30 A_{DC}, 300 µs Pulse)	T_A = -55°C	V_{F4a}	950	-	**mV_{DC}**
	T_A = 25°C	V_{F4b}	845	930	
	T_A = 100°C	V_{F4c}	745	-	
	T_A = 125°C	V_{F4d}	710	800	
	T_A = 150°C	V_{F4e}	680	-	
Instantaneous Forward Voltage Drop (I_F =70 A_{DC}, 300 µs Pulse)	T_A = -55°C	V_{F5a}	1020	-	**mV_{DC}**
	T_A = 25°C	V_{F5b}	950	1030	
	T_A = 100°C	V_{F5c}	840	-	
	T_A = 125°C	V_{F5d}	810	900	
	T_A = 150°C	V_{F5e}	780	-	
Reverse Leakage Current (Rated V_R, 300 µs pulse minimum)	T_A = 25°C	I_{R1}	0.05	10	**µA**
	T_A = 100°C	I_{R2}	4.5	-	
	T_A = 125°C	I_{R3}	20	100	
	T_A = 150°C	I_{R4}	60	-	
Junction Capacitance (T_A = 25°C, f = 1 MHz)	V_R= 5 V	C_J	760	-	**pF**
	V_R = 10 V		580	650	
Reverse Recovery	I_F = 0.5 A, I_R = 1 A, I_{rr} = 0.25 A	t_{rr1}	40	50	**ns**
	I_F = 1 A, I_R = 1 A, I_{rr} = 0.1 A	t_{rr2}	80	-	**ns**
	I_F = 70 A, dI_F/dt = 130 A/µs, T_A = 25°C	t_{rr3}	45	-	**ns**
	I_F = 10 A, dI_F/dt = 100 A/µs, T_A = 25°C	t_{rr4}	45	-	**ns**
	I_F = 10 A, dI_F/dt = 100 A/µs, T_A = 25°C	I_{RM4}	3.8	-	**A**
Forward Recovery	I_F = 1 A	t_{fr}	20	-	**ns**
		V_{fr}	1.5	-	**V**

Solid State Devices, Inc.
14701 Firestone Blvd. * La Mirada, Ca 90638
Phone: (562) 404-4474 * Fax: (562) 404-1773
ssdi@ssdi-power.com * www.ssdi-power.com

SER70KB20 / SER70KE20
Series

SED70Kx20 Series
Average VF vs. IF

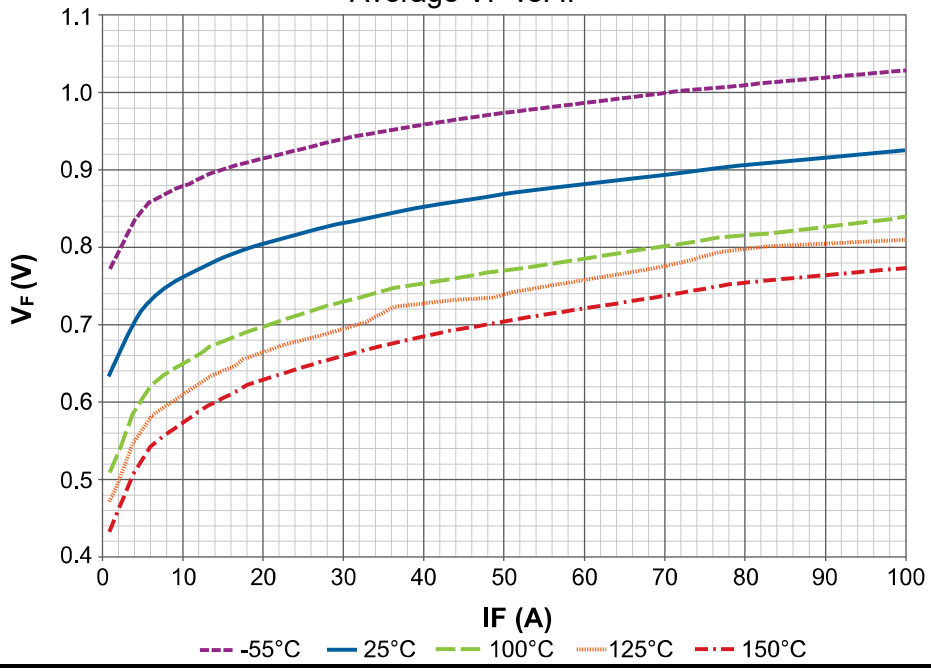

Reverse Recovery
I_F = 10 A
dI_F/dt = 100 A/µs
T_A = 25°C
t_{RR} typ = 45 ns

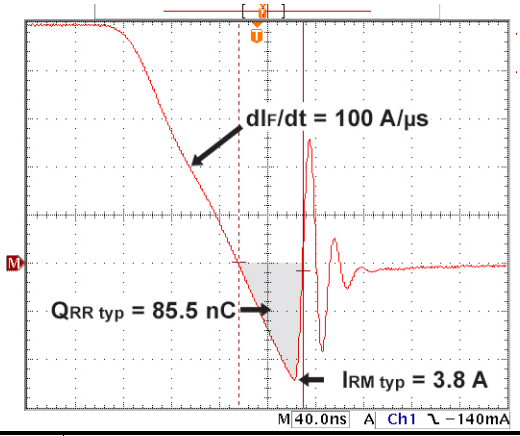

CASE OUTLINE: KB20 Series

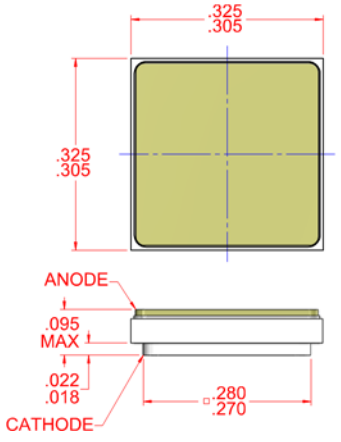

CASE OUTLINE: KE20 Series

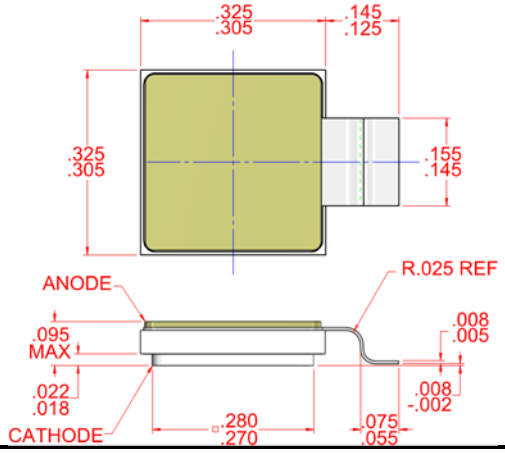

NOTE: All specifications are subject to change without notification. SCD's for these devices should be reviewed by SSDI prior to release.	**DATA SHEET #: RC0205A**	**DOC**