Solid State Devices, Inc.
14701 Firestone Blvd * La Mirada, Ca 90638
Phone: (562) 404-4474 * Fax: (562) 404-1773
ssdi@ssdi-power.com * www.ssdi-power.com

ST160KS014FP5 – ST160KS132FP5

DESIGNER'S DATA SHEET

Part Number / Ordering Information 1/

ST160K S __ FP5 __ __

- **Screening**2/
  - __ = Not Screened
  - TX = TX Level
  - TXV = TXV Level
  - S = S Level
- **Lead Bend Options:**
  - __ = Straight Leads
  - DB = Down bend
  - UB = Up Bend
- **Package:** FP5 = 5 Pin Flat Pack
- **Standoff Voltage:** 014 –132 = 144 – 1320 V
- **Configuration:** S = Unidirectional
- **Power** 160K =160 kW

160 kW Unidirectional Transient Voltage Suppressor
144 - 1320 VOLTS

FEATURES:
- High Peak Pulse Power Dissipation
- Hermetically Sealed Package
- High Surge Rating
- TX, TXV, S-Level Screening Available
- Bi-directional is Available

APPLICATIONS:
- Protection of Voltage Sensitive Components
- Protection Against Power Interruption
- Lightning Protection

Maximum Ratings3/		Symbol	Value	Unit
Peak Pulse Power Dissipation T_L = 25°C, 10/1000 µs waveform (see Fig 1)	ST160K	P_{PPM}	160,000	W
Steady State Power Dissipation T_L = 25°C, L = 0.5"		P_D	20	W
Peak Forward Surge Current 8.3 ms single half sine wave		I_{FSM}	500	A
Operating Temperature		T_{op}	-65 to +125	°C
Storage Temperature		T_{stg}	-65 to +150	°C
Maximum Forward Voltage Drop I_F = 100 A		V_F	42	V
Thermal Resistance Junction to Lead, L = 0.5"		$R_{\theta JL}$	5	°C/W

NOTES: *Pulsed per MIL-STD-750.
1/ For ordering information, price, operating curves, and availability – contact factory.
2/ Screening based on MIL-PRF-19500. Screening flows available on request.
3/ T_A = 25°C unless otherwise noted.
4/ All voltages are measured with an automated test set using a 35 msec test time. Longer or shorter test times will have a corresponding effect on the measured value due to heating effects.

5 Pin Flat Pack (FP5)

Figure 1 - Exponential 10 / 1000 µS Waveform

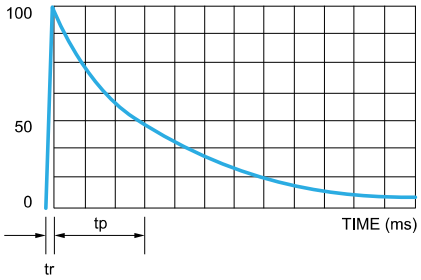

NOTE: All specifications are subject to change without notification. SCD's for these devices should be reviewed by SSDI prior to release.	**DATA SHEET #: T00048A**	**DOCX**

Solid State Devices, Inc.
14701 Firestone Blvd * La Mirada, Ca 90638
Phone: (562) 404-4474 * Fax: (562) 404-1773
ssdi@ssdi-power.com * www.ssdi-power.com

ST160KS014FP5 – ST160KS132FP5

Part Number	Breakdown Voltage[4] @ I_T		Test Current	Clamping Voltage (10 / 1000 µs)		Maximum Reverse Current @ Standoff Voltage	
	V_{BR} (min)	V_{BR} (max)	I_T	$V_{C\ Max}$	@ I_{PP}	I_R	V_R
	V	V	mA	V	A	µA	V
ST160KS014	159.6	176.4	20	238.8	670.0	1200	144
ST160KS015	172.8	190.8	20	258.0	620.2	800	156
ST160KS016	187.2	206.4	20	278.4	574.7	300	168
ST160KS018	200.4	222.0	2	292.8	546.4	150	180
ST160KS019	213.6	236.4	2	312.0	512.8	80	192
ST160KS020	226.8	250.8	2	331.2	483.1	30	204
ST160KS021	240.0	265.2	2	350.4	456.6	15	216
ST160KS024	266.4	294.0	2	388.8	411.5	8	240
ST160KS026	292.8	322.8	2	426.0	375.6	8	264
ST160KS028	320.4	354.0	2	466.8	342.8	8	288
ST160KS031	346.8	382.8	2	505.2	316.7	8	312
ST160KS033	373.2	412.8	2	544.8	293.7	8	336
ST160KS036	399.6	441.6	2	580.8	275.5	8	360
ST160KS039	440.4	487.2	2	639.6	250.2	8	396
ST160KS043	480.0	530.4	2	697.2	229.5	8	432
ST160KS048	532.8	589.2	2	774.0	206.7	8	480
ST160KS051	573.6	633.6	2	832.8	192.1	8	516
ST160KS054	600.0	663.6	2	872.4	183.4	8	540
ST160KS057	639.6	706.8	2	928.8	172.3	8	576
ST160KS061	680.4	752.4	2	988.8	161.8	8	612
ST160KS064	720.0	795.6	2	1045.2	153.1	8	648
ST160KS069	772.8	854.4	2	1123.2	142.5	8	696
ST160KS072	800.4	884.4	2	1161.6	137.7	8	720
ST160KS076	853.2	943.2	2	1236.0	129.4	8	768
ST160KS084	933.6	1032.0	2	1356.0	118.0	8	840
ST160KS090	999.6	1105.2	2	1452.0	110.2	8	900
ST160KS093	1040.4	1149.6	2	1512.0	105.8	8	936
ST160KS102	1132.8	1248.0	2	1644.0	97.3	8	1020
ST160KS108	1200.0	1332.0	2	1752.0	91.3	8	1080
ST160KS120	1332.0	1476.0	2	1944.0	82.3	8	1200
ST160KS132	1464.0	1620.0	2	2124.0	75.3	8	1320

Solid State Devices, Inc.
14701 Firestone Blvd * La Mirada, Ca 90638
Phone: (562) 404-4474 * Fax: (562) 404-1773
ssdi@ssdi-power.com * www.ssdi-power.com

ST160KS014FP5 – ST160KS132FP5

CASE OUTLINE: 5 PIN FLAT PACK (FP5)

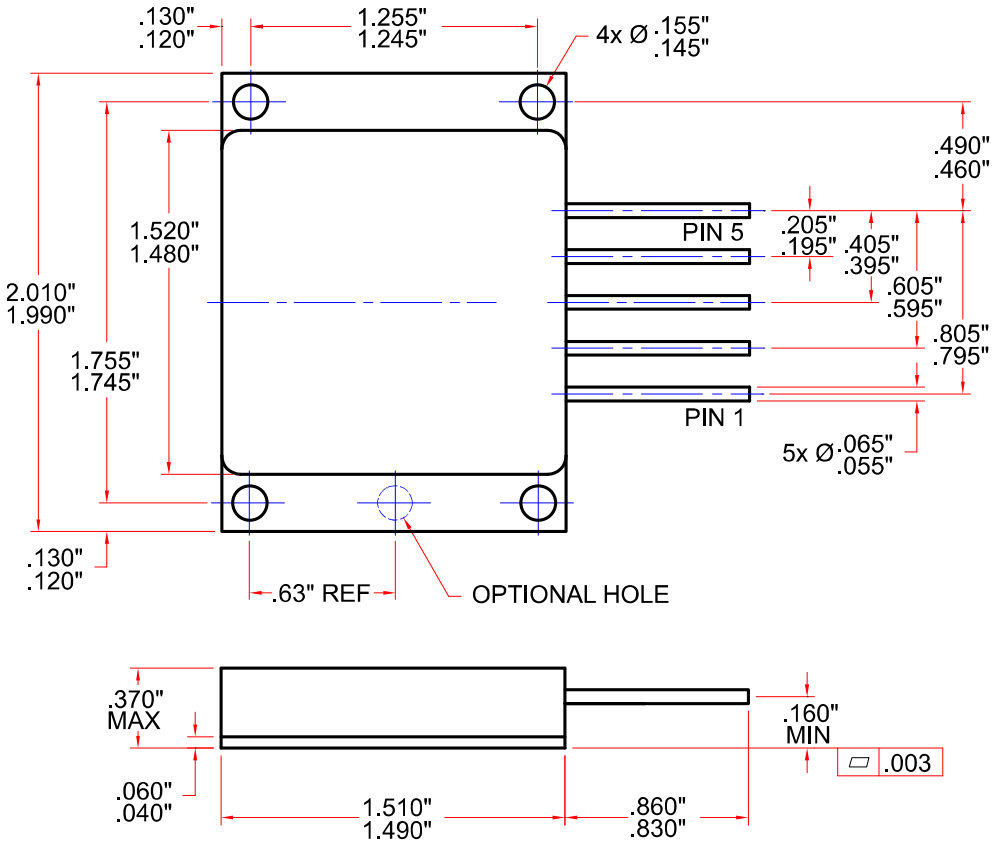

PIN ASSIGNMENT
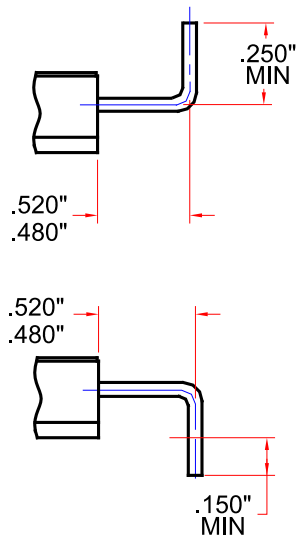
Pin 1 & 2: CATHODE
Pin 3: CENTER TAP CONNECTION – used for testing only
Pin 4 & 5: ANODE