THYRISTORS

SILICON CONTROLLED RECTIFIERS
PROGRAMMABLE UNIJUNCTION TRANSISTORS

shortform catalog

2019

Solid State Devices, Inc.
JANS Certified Manufacturer
ISO 9001 & AS9100 Certified
www.ssdi-power.com

SOLID STATE DEVICES, INC.

Company Overview

Serving the Aerospace & Defense Industries for 50+ years

From its inception, SSDI has shown an unwavering commitment to deliver hermetic semiconductor devices and assemblies for critical aerospace and defense applications. This pursuit has driven SSDI to not only provide the highest quality in widely used standard products, but to continually develop unique, innovative solutions aimed at enhancing performance and resolving real world issues.

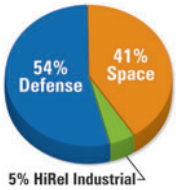

3H Products

- **High Density**: continually evaluate materials, processes and package designs to reduce footprint and weight
- **High Performance**: utilize the latest technology and highly refined processes to create innovative solutions
- **High Reliability**: continually improving quality management system to achieve the highest quality

ISO 9001 & AS9100 Certified

PERRY JOHNSON REGISTRARS, INC.
Certificate of Registration

MIL-PRF-19500
SEMICONDUCTOR DEVICES
JANS MANUFACTURER CERTIFICATION
IS HEREBY AWARDED TO
Solid State Devices Inc.
14701 Firestone Blvd.
La Mirada, CA 90638

JANS Certified

Solution Focused Supplier

- **Engineering / Manufacturing / Quality Review**: precisely match high reliability product capabilities to the needs of customers' applications
- **700+ Years of Engineering / Technical Experience in the Semiconductor Manufacturing Field**: engineers and technical staff have over 700+ years of experience from companies like Microsemi, International Rectifier, Semtech, Motorola, and Unitrode
- **Comprehensive In-House Support Services**:
  - Design engineering
  - Mechanical engineering
  - HiRel screening / testing
  - Manufacturing expertise
  - Wafer fabrication
  - Package / tooling capabilities
  - Ordering / document processing assistance
- **Wide Variety of Package Options**:
  - Surface mount
  - Axial leaded
  - TO-25X Series
  - Stud mounts
  - TO-CAN types (i.e. TO-5)
  - Assemblies
  - Flat packs
  - Ceramic DIP
  - Custom packages

SDR8257

SPA648

- **New, Innovative Products and End of Life Solutions**
  - Product development
  - Build to data sheets or SCDs
  - Reverse engineering
  - Cross references available for most devices offered by competitors including Motorola, Texas Instruments, Microsemi, International Rectifier, Semtech, Siliconix, etc.
  - Replacements often offer improved performance
  - Special packaging
  - Samples / prototypes available
  - Read & record data and QCI data (provided where available)
  - Uniquely positioned to accommodate small quantity orders
  - Material lot traceability
  - Strong anti-counterfeit program

Wide Range of Products

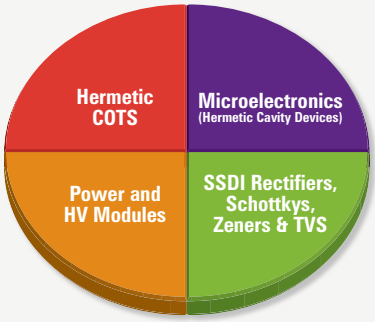

State of the Art Products

- ASPDs (Application Specific Power Devices)
- Axial Leaded & Surface Mount Rectifiers
- Battery Bypass Modules
- Bipolar Products
- Centertaps & Bridges
- Custom Products (per customer requirements)
- DC-DC Converters
- GaN Power FETs
- High Voltage Rectifiers & Assemblies
- IGBTs
- MOSFETs / JFETs
- Power Hybrids
- Power Modules
- Rectifiers
- Schottkys & Schottky Assemblies
- SiC Schottky Rectifiers
- SiC MOSFETs
- Small Signal Transistors
- Thyristors / SCRs
- TVS and Zener Assemblies
- Voltage Regulators
- Zeners

End of Life / DMS Solutions

- Bipolar Transistors
- Darlingtons
- Linear Voltage Regulators
- PUTs
- Rectifiers
- Reverse Engineering
- RF Products
- SCRs
- TVS
- UJTs
- Zeners

Notes: Minimum order may apply. Most products available in die form.

THYRISTORS

SSDI THYRISTORS

- 40+ years of heritage
- < 1 to 175+ Amps
- Up to 1600 Volts
- Faster tq versions of standard parts available
- Glass passivated die
- Surface mount and TO-25X versions of standard parts available
- TX, TXV, and S level screening available

Examples of Hermetic Packaging

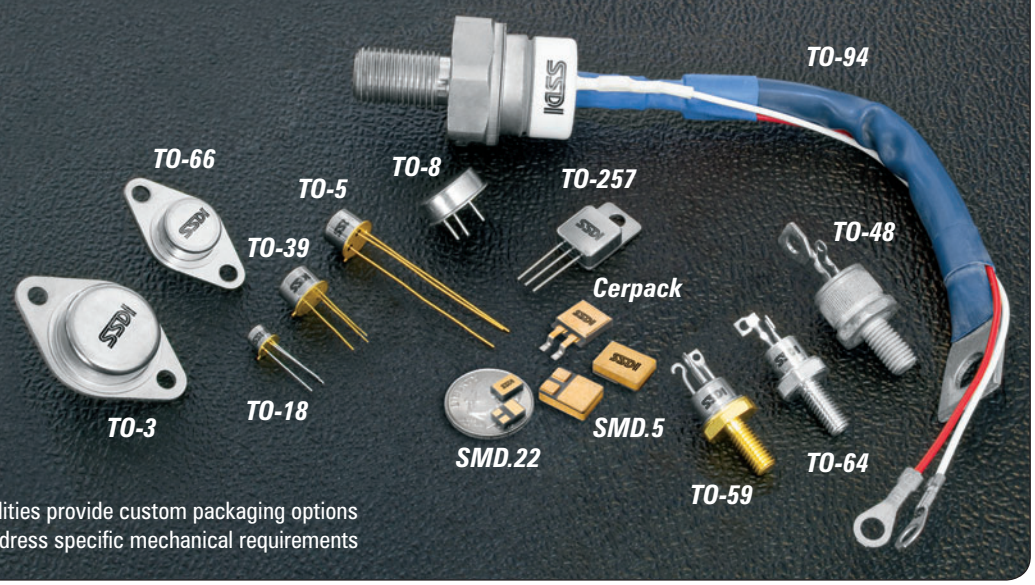

NOTE: SSDI's in-house manufacturing capabilities provide custom packaging options to improve electrical performance and / or address specific mechanical requirements

For over 40 years, Solid State Devices, Inc. (SSDI) has supplied thyristors to the Aerospace and Defense industries. SSDI manufactures a wide range of thyristors from less than 1 amp to over 175 amps and up to 1600 volts.

Many customers have taken advantage of SSDI's broad in-house capabilities to meet critical specifications. In some cases, SSDI has employed its engineering / design expertise to supply thyrisors with enhanced electrical performance such as higher current products and faster tq versions of standard industry products.

SSDI has also supplied surface mount versions of standard products to assist its customers in producing smaller designs. With its in-house packaging capabilities, SSDI offers thyristor devices in TO-25X and surface mount packages, which provide design engineers more board space and weight savings.

Whether searching for higher current, faster tq, or smaller/ modern packaging options, design engineers are no longer limited to the thyristor product offering of the past. Contact SSDI today for more information, samples, and to discuss how SSDI's thyristor product line can meet specific program needs.

TABLE OF CONTENTS

- **SILICON CONTROLLED RECTIFIERS (SCRs) 4**
  - **< 1 AMP 4**
  - **1 - 3 AMPS 5**
  - **4 - 10 AMPS 6**
  - **11 - 65 AMPS 7**
  - **66 - 109 AMPS 8**
  - **110 - 175 AMPS 9**

  Contact factory for higher current products (>175 A).
- **PROGRAMMABLE UNIJUNCTION TRANSISTORS (PUTs) 10**
- **PACKAGE OUTLINES 11**
- **SALES REPS & MAP/DIRECTIONS ..... back cover**

Note: TX, TXV, and S-level screening available for all devices. Screening based on MIL-PRF-19500. Screening flows available on request.

PACKAGE OUTLINES

- Cerpack 11
- SMD.22 11
- SMD.5 12
- TO-3 12
- TO-5 12
- TO-8 12
- TO-18 13
- TO-39 13
- TO-48 13
- TO-59 (2 Pins) 13
- TO-59 (3 Pins) 14
- TO-64 14
- TO-65 14
- TO-66 14
- TO-83 15
- TO-94 15
- TO-257 15

For additional information and data sheets:

14701 Firestone Blvd. La Mirada, CA 90638 | (562) 404-4474 | FAX (562) 404-1773 | ssdi@ssdi-power.com | www.ssdi-power.com

SCRs: < 1 AMP

Sorted by $I_{O(ARMS)}$, then V_{DRM}

Part Number	$I_{O\ (ARMS)}$ (A) *avg	V_{DRM} (V)	V_T (V)	V_{GT} min (V)	V_{GT} max (V)	I_{GT} (mA)	I_H min (mA)	I_H max (mA)	t_q (µs)	Package	Cross Reference Part Number
SFS1870A	0.22	30	2.5	0.4	0.8	0.2	0.3	5	Note 1	TO-5	2N1870A
SFS1871A	0.22	60	2.5	0.4	0.8	0.2	0.3	5	Note 1	TO-5	2N1871A
SFS1872A	0.22	100	2.5	0.4	0.8	0.2	0.3	5	Note 1	TO-5	2N1872A
SFS1873A	0.22	150	2.5	0.4	0.8	0.2	0.3	5	Note 1	TO-5	2N1873A
SFS1874A	0.22	200	2.5	0.4	0.8	0.2	0.3	5	Note 1	TO-5	2N1874A
SFS884	0.35*	15	1.5	0.4	0.72	0.08	Note 1	2.2	Note 1	TO-18	2N884
SFS885	0.35*	30	1.5	0.4	0.72	0.08	Note 1	2.2	Note 1	TO-18	2N885
SFS886	0.35*	60	1.5	0.4	0.72	0.08	Note 1	2.2	Note 1	TO-18	2N886
SFS887	0.35*	100	1.5	0.4	0.72	0.08	Note 1	2.2	Note 1	TO-18	2N887
SFS888	0.35*	150	1.5	0.4	0.72	0.08	Note 1	2.2	Note 1	TO-18	2N888
SFS889	0.35*	200	1.5	0.4	0.72	0.08	Note 1	2.2	Note 1	TO-18	2N889
SFS100ID	0.5	30	1.7	0.4	0.8	0.2	Note 1	5	Note 1	TO-18	ID100
SFS3027	0.5	30	1.5	0.44	0.6	0.02	0.3	4	Note 1	TO-18, SMD.22	2N3027
SFS100AA	0.5	60	1.5	0.44	0.6	0.002	0.3	2	50	TO-18	AA100
SFS101ID	0.5	60	1.7	0.4	0.8	0.2	Note 1	5	Note 1	TO-18	ID101
SFS107AA	0.5	60	1.5	0.44	0.6	0.02	0.3	2	50	TO-18	AA107
SFS3028	0.5	60	1.5	0.44	0.6	0.02	0.3	4	Note 1	TO-18, SMD.22	2N3028
SFS114AA	0.5	80	1.5	0.44	0.6	0.2	0.3	2	50	TO-18	AA114
SFS101AA	0.5	100	1.5	0.44	0.6	0.002	0.3	2	50	TO-18	AA101
SFS102ID	0.5	100	1.7	0.4	0.8	0.2	Note 1	5	Note 1	TO-18	ID102
SFS108AA	0.5	100	1.5	0.44	0.6	0.02	0.3	2	50	TO-18	AA108
SFS3029	0.5	100	1.5	0.44	0.6	0.02	0.3	4	Note 1	TO-18, SMD.22	2N3029
SFS103ID	0.5	150	1.7	0.4	0.8	0.2	Note 1	5	Note 1	TO-18	ID103
SFS115AA	0.5	150	1.5	0.44	0.6	0.2	0.3	2	50	TO-18	AA115
SFS102AA	0.5	200	1.5	0.44	0.6	0.002	0.3	2	50	TO-18	AA102
SFS104ID	0.5	200	1.7	0.4	0.8	0.2	Note 1	5	Note 1	TO-18	ID104
SFS109AA	0.5	200	1.5	0.44	0.6	0.02	0.3	2	50	TO-18	AA109
SFS103AA	0.5	300	1.5	0.44	0.6	0.002	0.3	2	50	TO-18	AA103
SFS105ID	0.5	300	1.7	0.4	0.8	0.2	Note 1	5	Note 1	TO-18	ID105
SFS110AA	0.5	300	1.5	0.44	0.6	0.02	0.3	2	50	TO-18	AA110
SFS116AA	0.5	300	1.5	0.44	0.6	0.2	0.3	2	50	TO-18	AA116
SFS104AA	0.5	400	1.5	0.44	0.6	0.002	0.3	2	50	TO-18	AA104
SFS106ID	0.5	400	1.7	0.4	0.8	0.2	Note 1	5	Note 1	TO-18	ID106
SFS111AA	0.5	400	1.5	0.44	0.6	0.02	0.3	2	50	TO-18	AA111
SFS117AA	0.5	400	1.5	0.44	0.6	0.2	0.3	2	50	TO-18	AA117
SFS118AA	0.5	500	1.5	0.44	0.6	0.2	0.3	2	50	TO-18	AA118

1/ Contact factory

TO-18

SMD.22

TO-39

TO-5

SCRs: 1 - 3 AMPS

Sorted by $I_{O(ARMS)}$, then V_{DRM}

Part Number	$I_{O\ (ARMS)}$ (A) *avg	V_{DRM} (V)	V_T (V)	V_{GT} min (V)	V_{GT} max (V)	I_{GT} (mA)	I_H min (mA)	I_H max (mA)	t_q (µs)	Package	Cross Reference Part Number
SFS090-1	1.5	200	2.6	Note 1	1.5	15	Note 1	25	50	TO-5	Note 1
SFS1595	1.6	50	2	Note 1	3	10	Note 1	100	60	TO-5	2N1595
SFS200ID	1.6	50	2.2	0.4	0.8	0.2	0.3	3	40	TO-39	ID200
SFS2323	1.6	50	1.3	Note 1	0.7	0.2	0.8	2	Note 1	TO-5	2N2323
SFS100AD	1.6	60	1.5	0.44	0.6	0.002	0.3	2	50	TO-39	AD100
SFS107AD	1.6	60	1.5	0.44	0.6	0.02	0.3	2	50	TO-39	AD107
SFS114AD	1.6	80	1.5	0.44	0.6	0.2	0.3	2	50	TO-39	AD114
SFS101AD	1.6	100	1.5	0.44	0.6	0.002	0.3	2	50	TO-39	AD101
SFS108AD	1.6	100	1.5	0.44	0.6	0.02	0.3	2	50	TO-39	AD108
SFS1596	1.6	100	2	Note 1	3	10	Note 1	100	60	TO-5	2N1596
SFS201ID	1.6	100	2.2	0.4	0.8	0.2	0.3	3	40	TO-39	ID201
SFS2324	1.6	100	1.3	Note 1	0.7	0.2	0.8	2	Note 1	TO-5	2N2324
SFS115AD	1.6	150	1.5	0.44	0.6	0.2	0.3	2	50	TO-39	AD115
SFS202ID	1.6	150	2.2	0.4	0.8	0.2	0.3	3	40	TO-39	ID202
SFS102AD	1.6	200	1.5	0.44	0.6	0.002	0.3	2	50	TO-39	AD102
SFS109AD	1.6	200	1.5	0.44	0.6	0.02	0.3	2	50	TO-39	AD109
SFS1597	1.6	200	2	Note 1	3	10	Note 1	100	60	TO-5	2N1597
SFS1826/18	1.6	200	1.3	Note 1	0.7	0.35	Note 1	5	Note 1	TO-18	Note 1
SFS203ID	1.6	200	2.2	0.4	0.8	0.2	0.3	3	40	TO-39	ID203
SFS2326	1.6	200	1.3	Note 1	0.7	0.2	0.8	2	Note 1	TO-5	2N2326
SFS1827/18	1.6	250	1.3	Note 1	0.7	0.35	Note 1	5	Note 1	TO-18	Note 1
SFS2327	1.6	250	1.3	Note 1	0.7	0.2	0.8	2	Note 1	TO-5	2N2327
SFS103AD	1.6	300	1.5	0.44	0.6	0.002	0.3	2	50	TO-39	AD103
SFS110AD	1.6	300	1.5	0.44	0.6	0.02	0.3	2	50	TO-39	AD110
SFS116AD	1.6	300	1.5	0.44	0.6	0.2	0.3	2	50	TO-39	AD116
SFS1598	1.6	300	2	Note 1	3	10	Note 1	100	60	TO-5	2N1598
SFS1828/18	1.6	300	1.3	Note 1	0.7	0.35	Note 1	5	Note 1	TO-18	Note 1
SFS2328	1.6	300	1.3	Note 1	0.7	0.2	0.8	2	Note 1	TO-5	2N2328
SFS300ID	1.6	300	2.2	0.4	0.8	0.2	0.3	3	40	TO-39	ID300
SFS104AD	1.6	400	1.5	0.44	0.6	0.002	0.3	2	50	TO-39	AD104
SFS111AD	1.6	400	1.5	0.44	0.6	0.02	0.3	2	50	TO-39	AD111
SFS117AD	1.6	400	1.5	0.44	0.6	0.2	0.3	2	50	TO-39	AD117
SFS1599	1.6	400	2	Note 1	3	10	Note 1	100	60	TO-5	2N1599
SFS1829/18	1.6	400	1.3	Note 1	0.7	0.35	Note 1	5	Note 1	TO-18	Note 1
SFS2329	1.6	400	1.3	Note 1	0.7	0.2	0.8	2	Note 1	TO-5	2N2329
SFS260-2	1.6	400	1.3	Note 1	0.7	0.275	0.8	2	Note 1	TO-5	Note 1
SFS301ID	1.6	400	2.2	0.4	0.8	0.2	0.3	3	40	TO-39	ID301
SFS118AD	1.6	500	1.5	0.44	0.6	0.2	0.3	2	50	TO-39	AD118
SFS002040	2.5	400	2.2	Note 1	3	5	Note 1	5	2.5	TO-5	Note 1

1/ Contact factory

SCRs: 4 - 10 AMPS

Sorted by $I_{O(ARMS)}$, then V_{DRM}

Part Number	$I_{O\ (ARMS)}$ (A) *avg	V_{DRM} (V)	V_T (V)	V_{GT} min (V)	V_{GT} max (V)	I_{GT} (mA)	I_H min (mA)	I_H max (mA)	t_q (µs)	Package	Cross Reference Part Number
SFS7030	5	50	1.5	Note 1	0.7	0.275	0.8	4	Note 1	TO-257	Note 1
SFS7031	5	100	1.5	Note 1	0.7	0.275	0.8	4	Note 1	TO-257	Note 1
SFS005020	5	200	2.8	1.2	2	15	Note 1	20	50	TO-66, TO-8	Note 1
SFS7032	5	200	1.5	Note 1	0.7	0.275	0.8	4	Note 1	TO-257	Note 1
SFS7033	5	300	1.5	Note 1	0.7	0.275	0.8	4	Note 1	TO-257	Note 1
SFS005040	5	400	2.8	1.2	2	15	Note 1	20	50	TO-66, TO-8	Note 1
SFS7034	5	400	1.5	Note 1	0.7	0.275	0.8	4	Note 1	TO-257	Note 1
SFS4201	5	500	2.6	Note 1	1.5	50	10	Note 1	20	TO-64	2N4201
SFS005060	5	600	2.8	1.2	2	15	Note 1	20	50	TO-66, TO-8	Note 1
SFS4202	5	600	2.6	Note 1	1.5	50	10	Note 1	20	TO-64	2N4202
SFS005070	5	700	3	Note 1	3.5	50	Note 1	50	12	TO-66	Note 1
SFS4203	5	700	2.6	Note 1	1.5	50	10	Note 1	20	TO-64	2N4203
SFS4204	5	800	2.6	Note 1	1.5	50	10	Note 1	20	TO-64	2N4204
SFS07050	7	50	2.2	Note 1	0.8	0.2	Note 1	0.01	Note 1	TO-5, SMD.5, Cerpack	Note 1
SFS07100	7	100	2.2	Note 1	0.8	0.2	Note 1	0.01	Note 1	TO-5, SMD.5, Cerpack	Note 1
SFS07200	7	200	2.2	Note 1	0.8	0.2	Note 1	0.01	Note 1	TO-5, SMD.5, Cerpack	Note 1
SFS07250	7	250	2.2	Note 1	0.8	0.2	Note 1	0.01	Note 1	TO-5, SMD.5, Cerpack	Note 1
SFS07300	7	300	2.2	Note 1	0.8	0.2	Note 1	0.01	Note 1	TO-5, SMD.5, Cerpack	Note 1
SFS07400	7	400	2.2	Note 1	0.8	0.2	Note 1	0.01	Note 1	TO-5, SMD.5, Cerpack	Note 1
2N1771A	7.4	50	1.85	0.2	2	30	Note 1	25	30	TO-64	2N1771A
2N1772A	7.4	100	1.85	0.2	2	30	Note 1	25	30	TO-64	2N1772A
2N1774A	7.4	200	1.85	0.2	2	30	Note 1	25	30	TO-64	2N1774A
2N1776A	7.4	300	1.85	0.2	2	30	Note 1	25	30	TO-64	2N1776A
2N1777A	7.4	400	1.85	0.2	2	30	Note 1	25	30	TO-64	2N1777A
2N1778A	7.4	500	1.85	0.2	2	30	Note 1	25	30	TO-64	2N1778A
SFS2619A	7.4	600	1.85	0.2	2	30	Note 1	25	30	TO-64	2N2619A
SFS2004/59	10	800	1.5	Note 1	1.5	50	0.2	Note 1	0.2	TO-59	Note 1

1/ Contact factory

SCRs: 11 - 65 AMPS

Sorted by $I_{O(ARMS)}$, then V_{DRM}

Part Number	$I_{O\ (ARMS)}$ (A) *avg	V_{DRM} (V)	V_T (V)	V_{GT} min (V)	V_{GT} max (V)	I_{GT} (mA)	I_H min (mA)	I_H max (mA)	t_q (μs)	Package	Cross Reference Part Number
SFS682	25	50	2.05	Note 1	1.5	40	Note 1	70	Note 1	TO-48	2N682
SFS683	25	100	2.05	Note 1	1.5	40	Note 1	70	Note 1	TO-48	2N683
SFS025150	25*	150	2	0.25	3	80	50	50	50	TO-3	Note 1
SFS685	25	200	2.05	Note 1	1.5	40	Note 1	70	Note 1	TO-48	2N685
SFS688	25	400	2.05	Note 1	1.5	40	Note 1	70	Note 1	TO-48	2N688
SFS826	25	400	Note 1	Note 1	1.5	50	5	Note 1	30	TO-64	Note 1
SFS827	25	500	Note 1	Note 1	1.5	50	5	Note 1	30	TO-64	Note 1
SFS690	25	600	2.05	Note 1	1.5	40	Note 1	70	Note 1	TO-48	2N690
SFS826	25	600	Note 1	Note 1	1.5	50	5	Note 1	30	TO-64	Note 1
SFS829	25	700	Note 1	Note 1	1.5	50	5	Note 1	30	TO-64	Note 1
SFS692	25	800	2.05	Note 1	1.5	40	Note 1	70	Note 1	TO-48	2N692
SFS2510	35	100	2.05	Note 1	1.5	180	Note 1	70	Note 1	TO-48	Note 1
SFS2520	35	200	2.05	Note 1	1.5	180	Note 1	70	Note 1	TO-48	Note 1
SFS2525	35	250	2.05	Note 1	1.5	180	Note 1	70	Note 1	TO-48	Note 1
SFS2530	35	300	2.05	Note 1	1.5	180	Note 1	70	Note 1	TO-48	Note 1
SFS9281	35	300		Note 1	2	110	Note 1	150	10	TO-48	Note 1
SFS2540	35	400	2.05	Note 1	1.5	180	Note 1	70	Note 1	TO-48	Note 1
SFS035060	35	600	140	0.25	2	80	10	70	40	TO-48	Note 1
SFS9103	57	400	25	Note 1	3	200	10	110	0.41	TO-48	Note 1
SFS9104	57	600	25	Note 1	3	200	10	110	0.41	TO-48	Note 1
SFS9105	57	800	25	Note 1	3	200	10	110	0.41	TO-48	Note 1
SFS063020	63	200	1.8	Note 1	3	150	Note 1	500	10	TO-65	SERIES 039
SFS063040	63	400	1.8	Note 1	3	150	Note 1	500	10	TO-65	SERIES 039
SFS1800-1	63	500	Note 1	Note 1	3	150	500	500	20	TO-64	Note 1
SFS063060	63	600	1.8	Note 1	3	150	Note 1	500	10	TO-65	SERIES 039
SFS1800-2	63	600	Note 1	Note 1	3	150	500	500	20	TO-64	Note 1
SFS1800-3	63	700	Note 1	Note 1	3	150	500	500	20	TO-64	Note 1
SFS063080	63	800	2.8	Note 1	2	150	Note 1	500	30	TO-65	SERIES 035
SFS063100	63	1000	2.8	Note 1	2	150	Note 1	500	30	TO-65	SERIES 035
SFS063120	63	1200	2.8	Note 1	2	150	Note 1	500	30	TO-65	SERIES 035

1/ Contact factory

TO-3

TO-48

TO-64

SCRs: 66 - 109 AMPS

Sorted by $I_{O(ARMS)}$, then V_{DRM}

Part Number	$I_{O\ (ARMS)}$ (A) *avg	V_{DRM} (V)	V_T (V)	V_{GT} min (V)	V_{GT} max (V)	I_{GT} (mA)	I_H min (mA)	I_H max (mA)	t_q (µs)	Package	Cross Reference Part Number
SFS1792A	79	50	2.1	Note 1	3	70	Note 1	75	40	TO-83	DSCC SERIES 99003
SFS1910A	79	50	2.1	Note 1	3	70	Note 1	75	40	TO-94	DSCC SERIES 99003
SFS1793A	79	100	2.1	Note 1	3	70	Note 1	75	40	TO-83	DSCC SERIES 99003
SFS1911A	79	100	2.1	Note 1	3	70	Note 1	75	40	TO-94	DSCC SERIES 99003
SFS1795A	79	200	2.1	Note 1	3	70	Note 1	75	40	TO-83	DSCC SERIES 99003
SFS1913A	79	200	2.1	Note 1	3	70	Note 1	75	40	TO-94	DSCC SERIES 99003
SFS1797A	79	300	2.1	Note 1	3	70	Note 1	75	40	TO-83	DSCC SERIES 99003
SFS1915A	79	300	2.1	Note 1	3	70	Note 1	75	40	TO-94	DSCC SERIES 99003
SFS1798A	79	400	2.1	Note 1	3	70	Note 1	75	40	TO-83	DSCC SERIES 99003
SFS1916A	79	400	2.1	Note 1	3	70	Note 1	75	40	TO-94	DSCC SERIES 99003
SFS1799A	79	500	2.1	Note 1	3	70	Note 1	75	40	TO-83	DSCC SERIES 99003
SFS1805A	79	500	2.1	Note 1	3	70	Note 1	75	40	TO-94	DSCC SERIES 99003
SFS1800A	79	600	2.1	Note 1	3	70	Note 1	75	40	TO-83	DSCC SERIES 99003
SFS1806A	79	600	2.1	Note 1	3	70	Note 1	75	40	TO-94	DSCC SERIES 99003
SFS080020	80	200	2.3	Note 1	3	100	Note 1	200	100	TO-65	SERIES 050
SFS080020A	80	200	1.5	Note 1	"-3"	"-100"	Note 1	200	100	TO-65	SERIES 050R
SFS080020C	80	200	2.5	Note 1	3	100	Note 1	200	100	TO-65	SERIES 051
SFS080040	80	400	2.3	Note 1	3	100	Note 1	200	100	TO-65	SERIES 050
SFS080040A	80	400	1.5	Note 1	"-3"	"-100"	Note 1	200	100	TO-65	SERIES 050R
SFS080040C	80	400	2.5	Note 1	3	100	Note 1	200	100	TO-65	SERIES 051
SFS080060	80	600	2.3	Note 1	3	100	Note 1	200	100	TO-65	SERIES 050
SFS080060A	80	600	1.5	Note 1	"-3"	"-100"	Note 1	200	100	TO-65	SERIES 050R
SFS080060C	80	600	2.5	Note 1	3	100	Note 1	200	100	TO-65	SERIES 051
SFS080080	80	800	2.3	Note 1	3	100	Note 1	200	100	TO-65	SERIES 050
SFS080080A	80	800	1.5	Note 1	"-3"	"-100"	Note 1	200	100	TO-65	SERIES 050R
SFS080080C	80	800	2.5	Note 1	3	100	Note 1	200	100	TO-65	SERIES 051
SFS080100	80	1000	2.3	Note 1	3	100	Note 1	200	100	TO-65	SERIES 050
SFS080100A	80	1000	1.5	Note 1	"-3"	"-100"	Note 1	200	100	TO-65	SERIES 050R
SFS080100C	80	1000	2.5	Note 1	3	100	Note 1	200	100	TO-65	SERIES 051
SFS080120	80	1200	2.3	Note 1	3	100	Note 1	200	100	TO-65	05012GOF-050
SFS080120A	80	1200	1.5	Note 1	"-3"	"-100"	Note 1	200	100	TO-65	SERIES 050R
SFS080120C	80	1200	2.5	Note 1	3	100	Note 1	200	100	TO-65	SERIES 051
SFS086030	86	300	1.8	Note 1	3	100	Note 1	200	100	TO-83; TO-94	SERIES 052, 55C
SFS086040	86	400	1.8	Note 1	3	100	Note 1	200	100	TO-83; TO-94	SERIES 052, 55C
SFS086050	86	500	1.8	Note 1	3	100	Note 1	200	100	TO-83; TO-94	SERIES 052, 55C
SFS086060	86	600	1.8	Note 1	3	100	Note 1	200	100	TO-83; TO-94	SERIES 052, 55C
SFS086080	86	800	1.8	Note 1	3	100	Note 1	200	100	TO-83; TO-94	SERIES 052, 55C
SFS086100	86	1000	1.8	Note 1	3	100	Note 1	200	100	TO-83; TO-94	SERIES 052, 55C
SFS086120	86	1200	1.8	Note 1	3	100	Note 1	200	100	TO-83; TO-94	SERIES 052, 55C

1/ Contact factory

SCRs: 110 AMPS

Sorted by $I_{O(ARMS)}$, then V_{DRM}

Part Number	$I_{O\ (ARMS)}$ (A) *avg	V_{DRM} (V)	V_T (V)	V_{GT} min (V)	V_{GT} max (V)	I_{GT} (mA)	I_H min (mA)	I_H max (mA)	t_q (µs)	Package	Cross Reference Part Number
SFS1909	110	25	1.6	Note 1	3	100	Note 1	200	100	TO-94	2N1909
SFS2023	110	25	1.6	Note 1	3	100	Note 1	200	100	TO-94	2N2023
SFS1792F	110	50	2.1	Note 1	3	70	Note 1	75	40	TO-83	2N1792F
SFS1910	110	50	1.6	Note 1	3	100	Note 1	200	100	TO-94	2N1910
SFS2024	110	50	1.6	Note 1	3	100	Note 1	200	100	TO-94	2N2024
SFS1793F	110	100	2.1	Note 1	3	70	Note 1	75	40	TO-83	2N1793F
SFS1911	110	100	1.6	Note 1	3	100	Note 1	200	100	TO-94	2N1911
SFS2025	110	100	1.6	Note 1	3	100	Note 1	200	100	TO-94	2N2025
SFS4361	110	100	1.6	Note 1	3	100	Note 1	200	100	TO-94	2N4361
SFS4371	110	100	1.6	Note 1	3	100	Note 1	200	100	TO-83	2N4371
SFS1912	110	150	1.6	Note 1	3	100	Note 1	200	100	TO-94	2N1912
SFS2026	110	150	1.6	Note 1	3	100	Note 1	200	100	TO-94	2N2026
SFS1794	110	200	1.6	Note 1	3	100	Note 1	200	100	TO-83	2N1794
SFS1795F	110	200	2.1	Note 1	3	70	Note 1	75	40	TO-83	2N1795F
SFS1913	110	200	1.6	Note 1	3	100	Note 1	200	100	TO-94	2N1913
SFS2027	110	200	1.6	Note 1	3	100	Note 1	200	100	TO-94	2N2027
SFS4362	110	200	1.6	Note 1	3	100	Note 1	200	100	TO-94	2N4362
SFS4372	110	200	1.6	Note 1	3	100	Note 1	200	100	TO-83	2N4372
SFS1795	110	250	1.6	Note 1	3	100	Note 1	200	100	TO-83	2N1795
SFS1914	110	250	1.6	Note 1	3	100	Note 1	200	100	TO-94	2N1914
SFS2028	110	250	1.6	Note 1	3	100	Note 1	200	100	TO-94	2N2028
SFS1796	110	300	1.6	Note 1	3	100	Note 1	200	100	TO-83	2N1796
SFS1797F	110	300	2.1	Note 1	3	70	Note 1	75	40	TO-83	2N1797F
SFS1915	110	300	1.6	Note 1	3	100	Note 1	200	100	TO-94	2N1915
SFS2029	110	300	1.6	Note 1	3	100	Note 1	200	100	TO-94	2N2029
SFS110040	110	400	1.6	Note 1	3	100	Note 1	200	100	TO-83; TO-94	SERIES 071
SFS1797	110	400	1.6	Note 1	3	100	Note 1	200	100	TO-83	2N1797
SFS1798F	110	400	2.1	Note 1	3	70	Note 1	75	40	TO-83	2N1798F
SFS1916	110	400	1.6	Note 1	3	100	Note 1	200	100	TO-94	2N1916
SFS2030	110	400	1.6	Note 1	3	100	Note 1	200	100	TO-94	2N2030
SFS4363	110	400	1.6	Note 1	3	100	Note 1	200	100	TO-94	2N4363
SFS4373	110	400	1.6	Note 1	3	100	Note 1	200	100	TO-83	2N4373
SFS110050	110	500	1.6	Note 1	3	100	Note 1	200	100	TO-83; TO-94	SERIES 071, 70C
SFS1798	110	500	1.6	Note 1	3	100	Note 1	200	100	TO-83	2N1798
SFS1799F	110	500	2.1	Note 1	3	70	Note 1	75	40	TO-83	2N1799F
SFS1805	110	500	1.6	Note 1	3	100	Note 1	200	100	TO-94	2N1805
SFS110060	110	600	1.6	Note 1	3	100	Note 1	200	100	TO-83; TO-94	SERIES 071, 70C
SFS1799	110	600	1.6	Note 1	3	100	Note 1	200	100	TO-83	2N1799
SFS1800F	110	600	2.1	Note 1	3	70	Note 1	75	40	TO-83	2N1800F

1/ Contact factory

SCRs: 110 (cont.) - 175 AMPS

Sorted by $I_{O(ARMS)}$, then V_{DRM}

Part Number	$I_{O\ (ARMS)}$ (A) *avg	V_{DRM} (V)	V_T (V)	V_{GT} min (V)	V_{GT} max (V)	I_{GT} (mA)	I_H min (mA)	I_H max (mA)	t_q (µs)	Package	Cross Reference Part Number
SFS1806	110	600	1.6	Note 1	3	100	Note 1	200	100	TO-94	2N1806
SFS4364	110	600	1.6	Note 1	3	100	Note 1	200	100	TO-94	2N4364
SFS4374	110	600	1.6	Note 1	3	100	Note 1	200	100	TO-83	2N4374
SFS1801	110	700	1.6	Note 1	3	100	Note 1	200	100	TO-83	2N1801
SFS1807	110	700	1.6	Note 1	3	100	Note 1	200	100	TO-94	2N1807
SFS1800	110	720	1.6	Note 1	3	100	Note 1	200	100	TO-83	2N1800
SFS110080	110	800	1.6	Note 1	3	100	Note 1	200	100	TO-83; TO-94	SERIES 071, 70C
SFS1802	110	800	1.6	Note 1	3	100	Note 1	200	100	TO-83	2N1802
SFS4365	110	800	1.6	Note 1	3	100	Note 1	200	100	TO-94	2N4365
SFS4375	110	800	1.6	Note 1	3	100	Note 1	200	100	TO-83	2N4375
SFS1803	110	900	1.6	Note 1	3	100	Note 1	200	100	TO-83	2N1803
SFS110100	110	1000	1.6	Note 1	3	100	Note 1	200	100	TO-83; TO-94	SERIES 071, 70C
SFS1804	110	1000	1.6	Note 1	3	100	Note 1	200	100	TO-83	2N1804
SFS4366	110	1000	1.6	Note 1	3	100	Note 1	200	100	TO-94	2N4366
SFS4376	110	1000	1.6	Note 1	3	100	Note 1	200	100	TO-83	2N4376
SFS110120	110	1200	1.6	Note 1	3	100	Note 1	200	100	TO-83; TO-94	SERIES 071, 70C
SFS4367	110	1200	1.6	Note 1	3	100	Note 1	200	100	TO-94	2N4367
SFS4377	110	1200	1.6	Note 1	3	100	Note 1	200	100	TO-83	2N4377
SFS125030	125	300	1.4	Note 1	3	100	Note 1	200	100	TO-83; TO-94	SERIES 080
SFS125040	125	400	1.4	Note 1	3	100	Note 1	200	100	TO-83; TO-94	SERIES 080
SFS125050	125	500	1.4	Note 1	3	100	Note 1	200	100	TO-83; TO-94	SERIES 080
SFS125060	125	600	1.4	Note 1	3	100	Note 1	200	100	TO-83; TO-94	SERIES 080
SFS125080	125	800	1.4	Note 1	3	100	Note 1	200	100	TO-83; TO-94	SERIES 080
SFS125100	125	1000	1.4	Note 1	3	100	Note 1	200	100	TO-83; TO-94	SERIES 080
SFS125120	125	1200	1.4	Note 1	3	100	Note 1	200	100	TO-83; TO-94	SERIES 080
SFS175090	175	900	3	Note 1	3	100	2	70	0.41	TO-48	Note 1

1/ Contact factory

PUTs

Part Number	$I_{O\ (ARMS)}$ (A) *avg	V_{DRM} (V)	V_T (V)	V_{GT} min (V)	V_{GT} max (V)	I_{GT} (mA)	I_H min (mA)	I_H max (mA)	t_q (µs)	Package	Cross Reference Part Number
SFS6027	0.15 (1/)	40	5	1.5	2	50	6	5	80	TO-18	2N6027
SFS6028	0.15 (1/)	40	5	1.5	0.15	25	6	5	80	TO-18	2N6028
SFS056A	0.175 (1/)	70	(5/)	1.4	0.06 (3/)	1 (4/)	6	3	80	TO-18	BRY56A
SFS6116	0.3	40	5	1.5	2	50	6	5	80	TO-18	2N6116
SFS6117	0.3	40	5	1.5	0.3	50	6	5	80	TO-18	2N6117
SFS6118	0.3	40	5	1.5	0.15	25	6	5	80	TO-18	2N6118
SFS6137	0.3	40	5	1	2	50	9	5	80	TO-18	2N6137
SFS6138	0.3	100	5	1	2	50	9	5	80	TO-18	2N6138

1/ DC 2/ R_G = 1M 3/ R_G = 100k 4/ R_G = 100k, min limit 5/ Contact factory

CASE OUTLINES

EXAMPLES OF HERMETIC SURFACE MOUNT PACKAGES

Throughout its 45+ year history of supplying high reliability products to the aerospace and defense industries, SSDI has delivered a variety of products in a wide range of hermetic packages. While most of the standard thyristor products are offered in older metal can and stud mount packages, SSDI also offers updated packaging technology such as TO-25X and surface mount packages.

The modern packaging options often provide design flexibility with their smaller footprints and lower weight, but can also translate into enhanced electrical performance. The surface mount packages will also eliminate the need for drilling holes or mounting hardware. The pictures on the right show some of the hermetic surface mount packages available.

In addition to its packaging capabilities, SSDI also utilizes its expansive die bank and established foundry relationships to provide solutions for sustainment issues that customers may experience with other suppliers. SSDI's engineering, manufacturing, and quality processes are integrated to accommodate small volumes, but SSDI also purchases end of life die stock to maintain its long term commitment to programs.

SSDI is uniquely positioned to provide solutions when customers encounter difficulties with mechanical specifications, electrical performance, or availability of parts. Contact SSDI today to discuss how its products and services can meet specific program needs.

(562) 404-4474 · www.ssdi-power.com

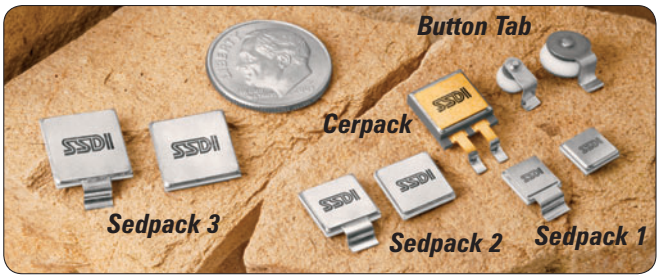

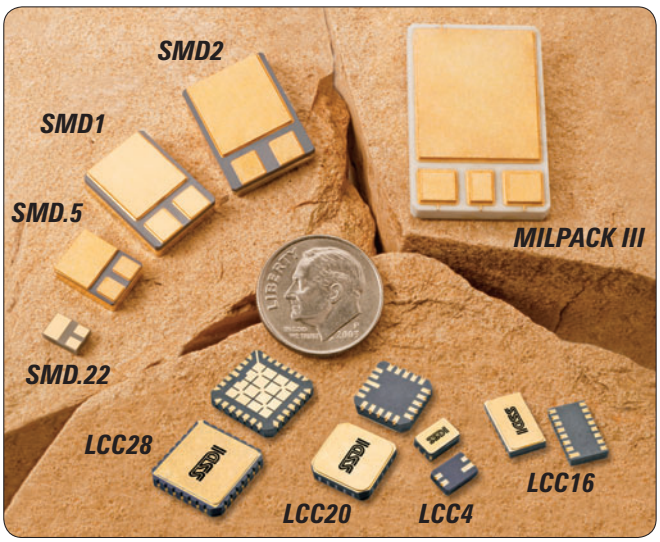

Cerpack

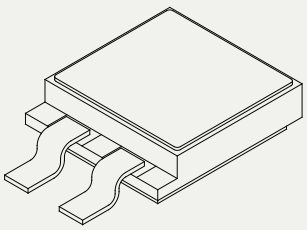

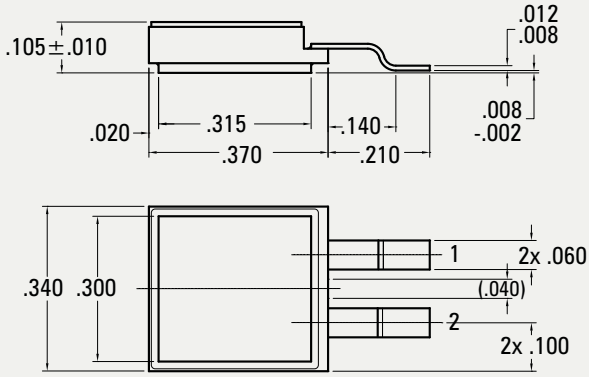

SMD.22

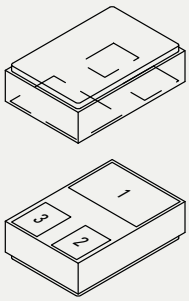

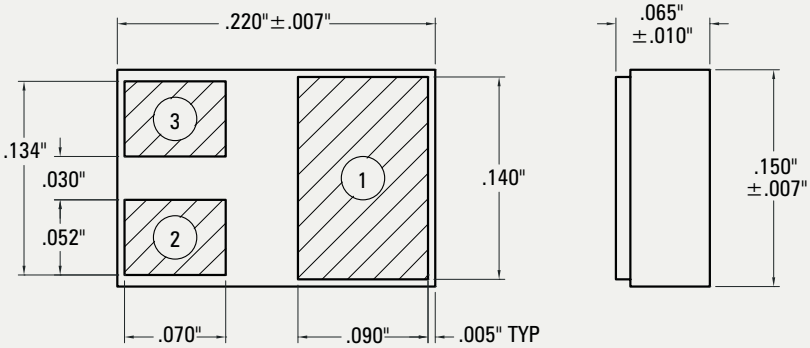

Tolerance (Unless otherwise specified): XXX ± .005"
XX ± .010"

For reference only, please refer to SSDI data sheets at www.ssdi-power.com for more information.

CASE OUTLINES

SMD.5

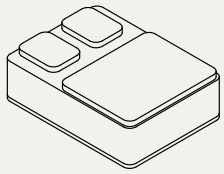

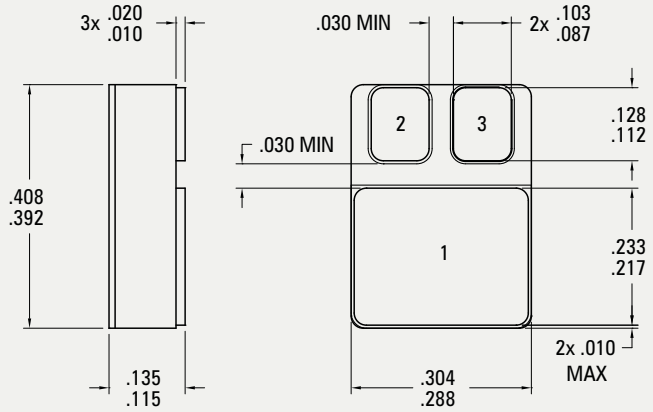

TO-3

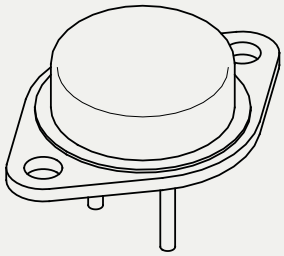

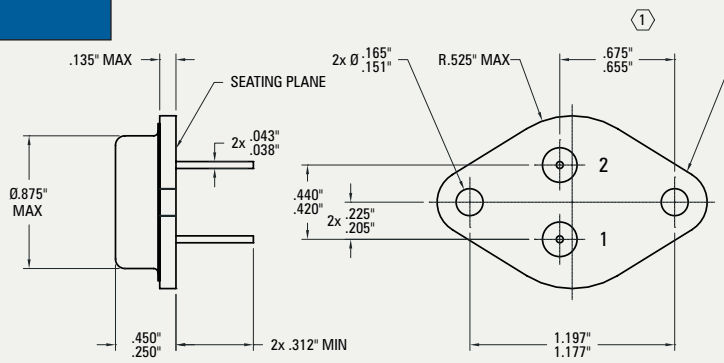

NOTES:

1. THIS DIMENSION SHALL BE MEASURED AT POINTS .050 - .055" BELOW THE SEATING PLANE. WHEN GAGE IS NOT USED, MEASUREMENT WILL BE MADE AT SEATING PLANE.

THIS OUTLINE DOES NOT MEET THE MINIMUM CRITERIA ESTABLISHED BY JS-10 FOR REGISTRATION.

TO-5

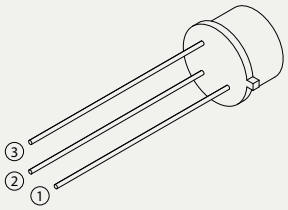

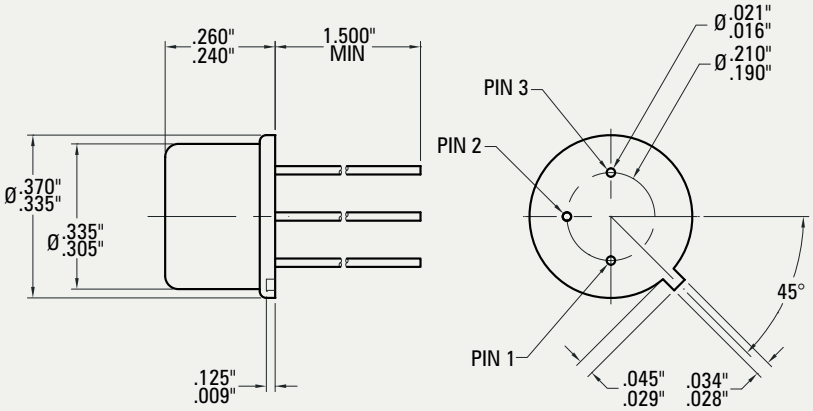

TO-8

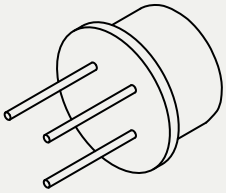

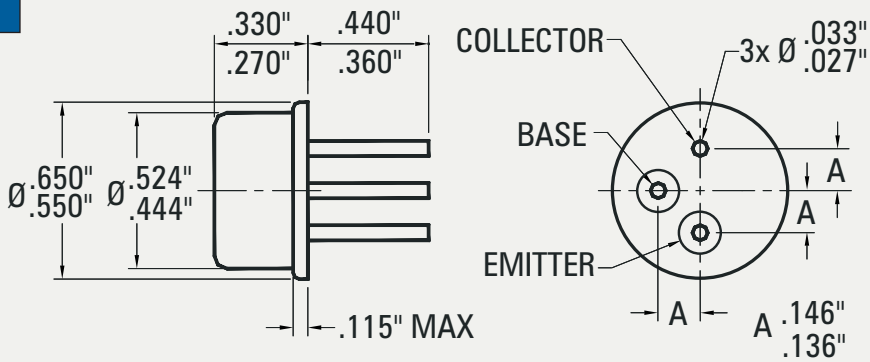

Tolerance (Unless otherwise specified): XXX ± .005"
XX ± .010"

For reference only, please refer to SSDI data sheets at www.ssdi-power.com for more information.

CASE OUTLINES

TO-18

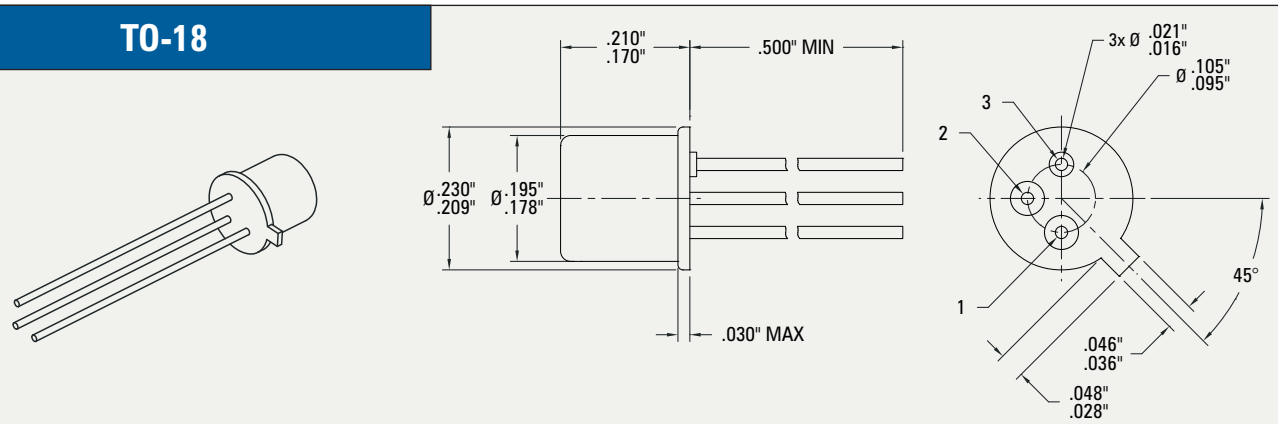

TO-39

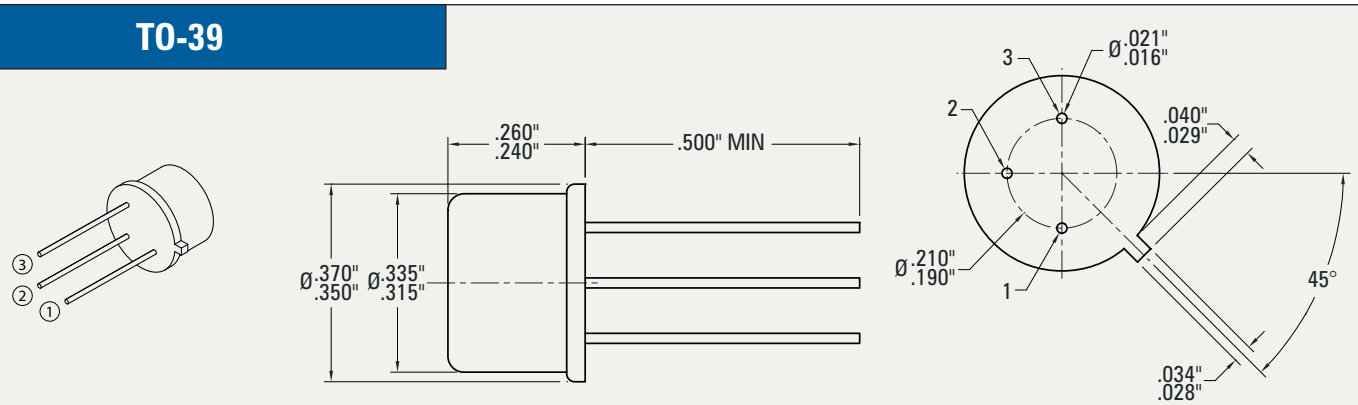

TO-48

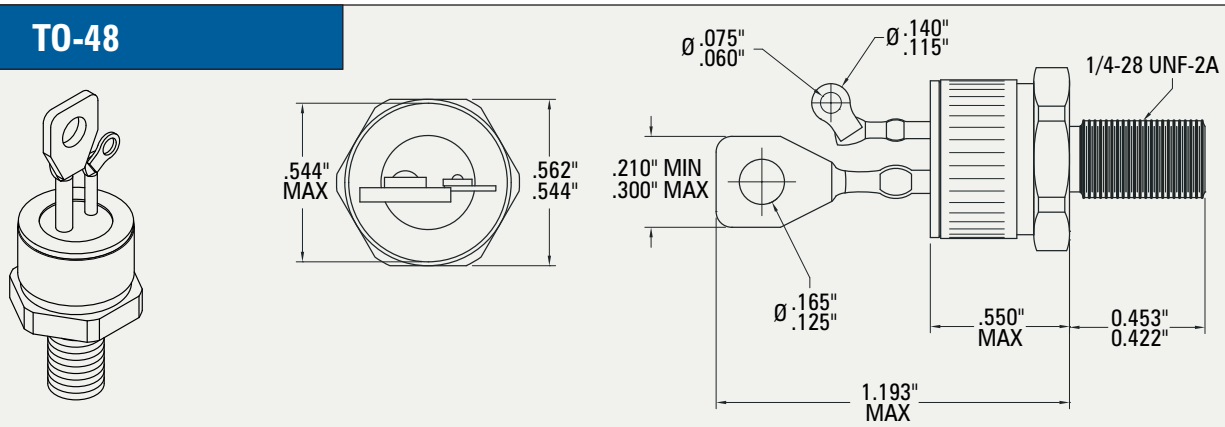

TO-59 (2 Pins)

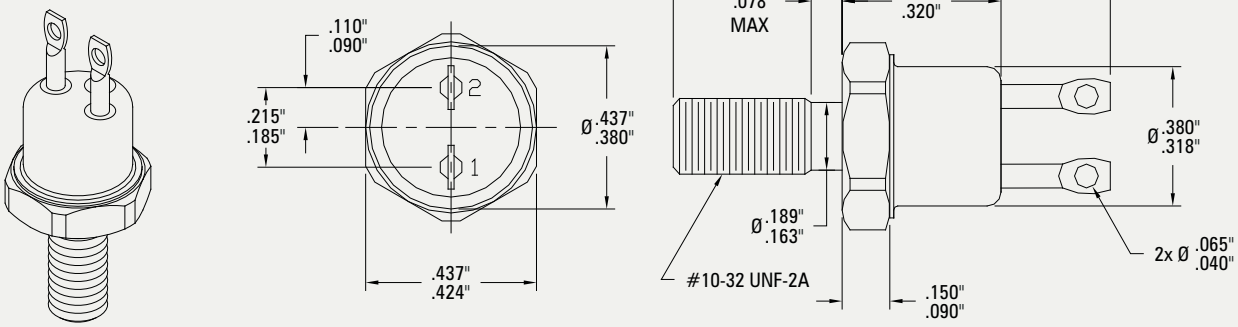

Tolerance (Unless otherwise specified): XXX ± .005"
XX ± .010"

For reference only, please refer to SSDI data sheets at www.ssdi-power.com for more information.

CASE OUTLINES

TO-59 (3 Pins)

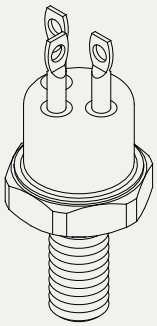

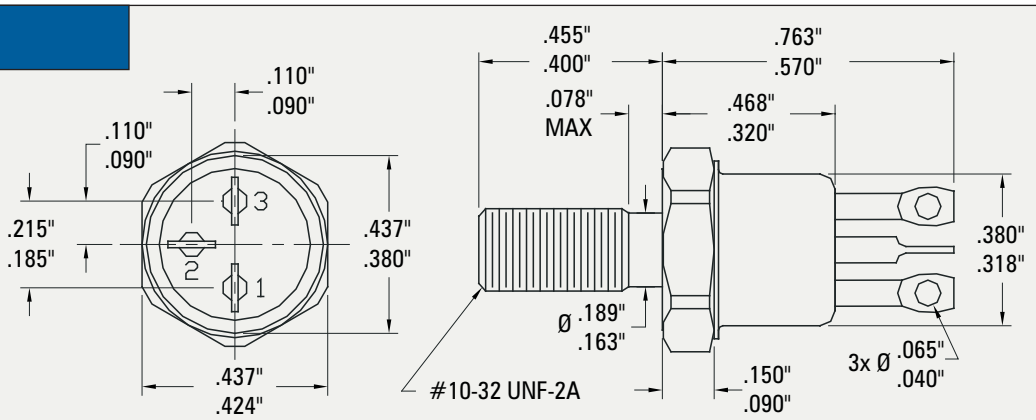

TO-64

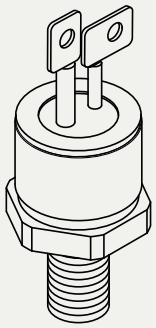

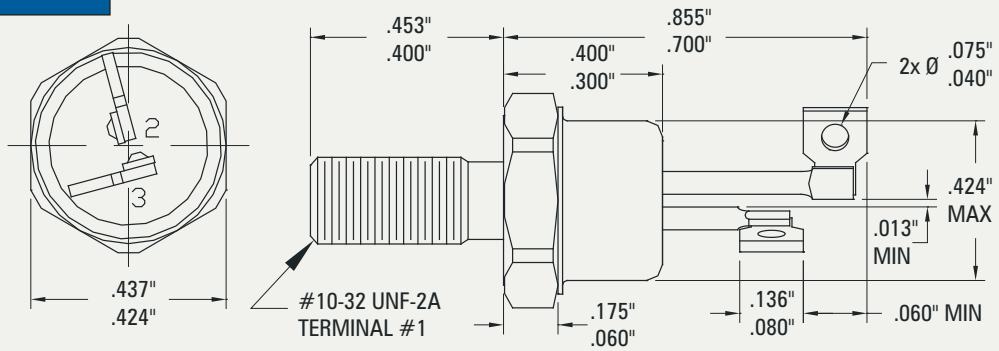

TO-65

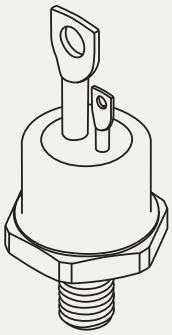

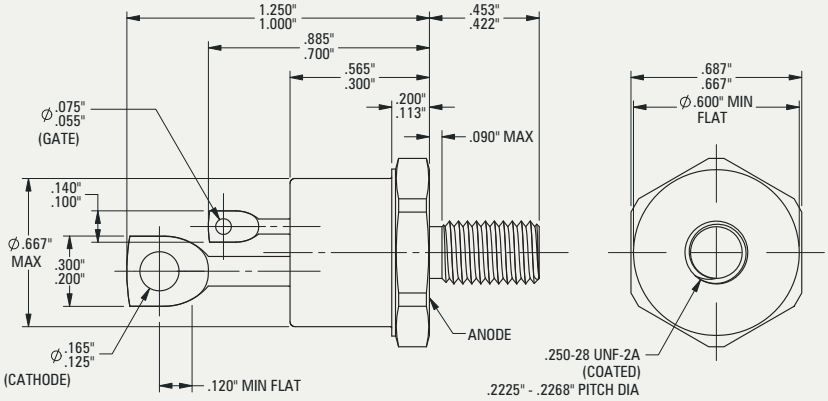

TO-66

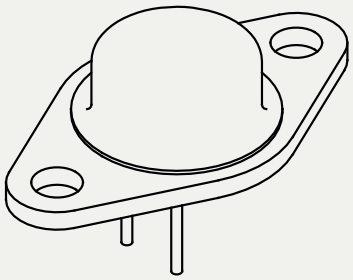

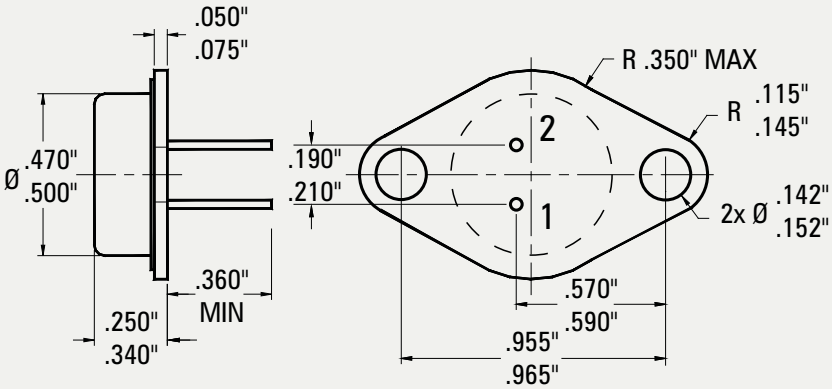

Tolerance (Unless otherwise specified): XXX ± .005"
XX ± .010"

For reference only, please refer to SSDI data sheets at www.ssdi-power.com for more information.

CASE OUTLINES

TO-83

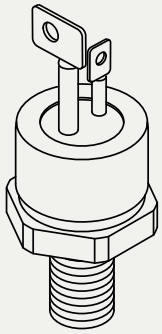

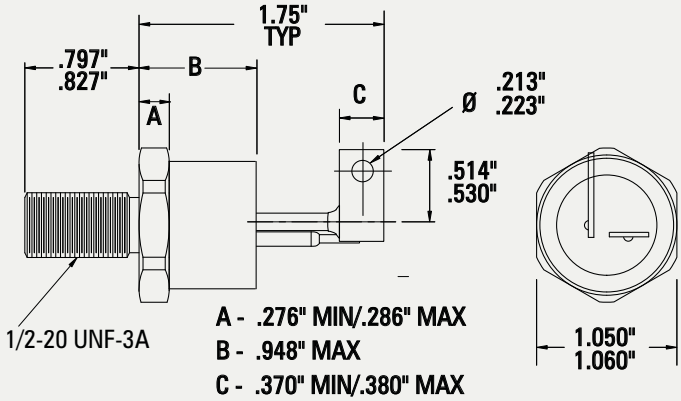

TO-94

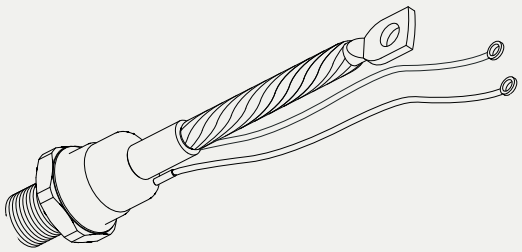

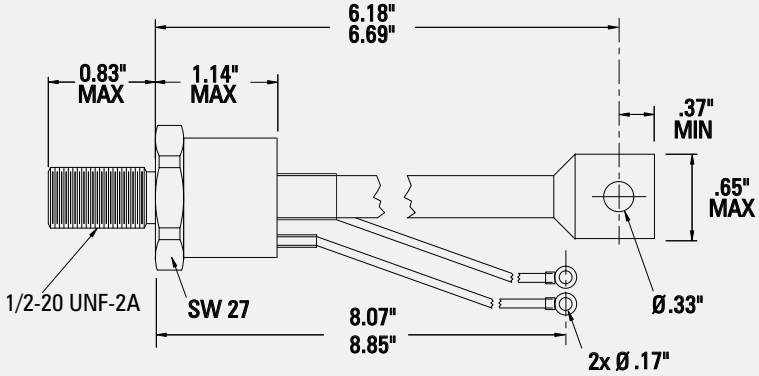

TO-257

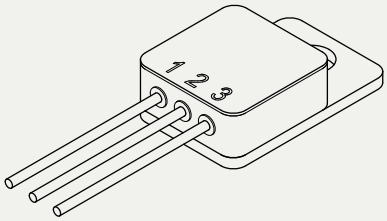

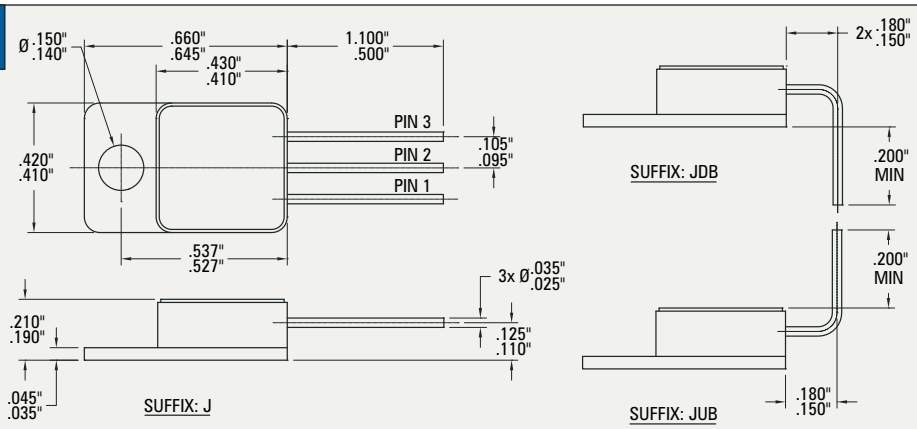

Tolerance (Unless otherwise specified): XXX ± .005"
XX ± .010"

For reference only, please refer to SSDI data sheets at www.ssdi-power.com for more information.

The information in this book has been carefully checked and is believed to be accurate; however, no responsibility is assumed for errors or omissions.

Solid State Devices, Inc. reserves the right to make changes without further notice to any product herein. Solid State Devices, Inc. does not assume liability arising out of the application or use of any product or circuit described herein; neither does it convey any license under its patent rights nor the rights of others.

Solid State Devices, Inc.® and SSDI® are registered trademarks of Solid State Devices, Inc. Solid State Devices, Inc. is an Equal Opportunity/Affirmative Action Employer.

Warnings

Due to technical requirements, components may contain dangerous substances. For information on the types in question, please contact SSDI.

SSDI components may be used in life-support devices or systems only with the express written approval of SSDI. Failure of such components can be reasonably expected to cause the failure of that life-support device or system, or to affect the safety or effectiveness of that device or system. Life support devices or systems are intentionally implanted in a human body, or used to support and/or maintain and/or protect human life. If they fail, it is reasonable to assume that the health of the user or other persons may be endangered.

Thyristors Catalog 1.10 (03/20/2019) - Entire contents copyright © 2019 Solid State Devices, Inc. All Rights Reserved.
No part of this catalog may be reproduced, transmitted, rewritten, scanned, stored mechanically or electronically, translated into other languages, or adapted for any use without the express written permission of Solid State Devices, Inc.

Domestic Sales Representatives

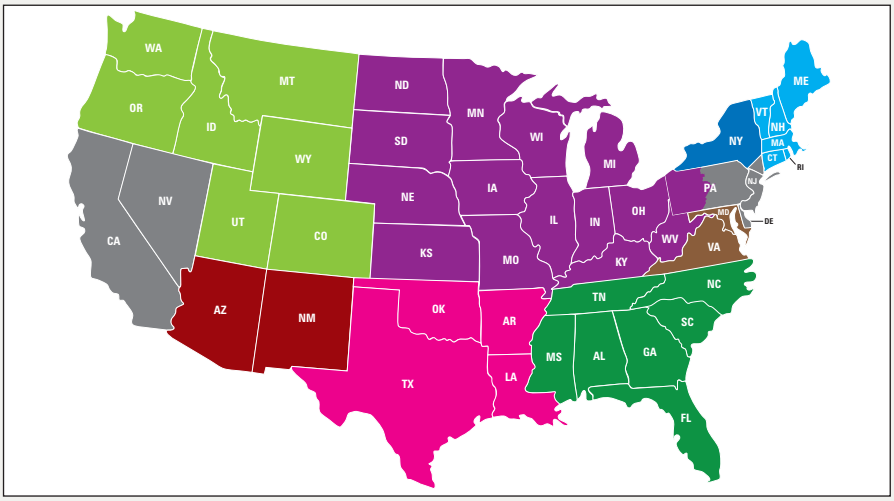

Straube Associates *(CO, UT, ID, MT, WY, WA, OR)*
7970 Sheridan Blvd. Suite C, Westminster, CO 80003
Phone: 303-426-0890
Website: straubecompanies.com
main@straubecompanies.com

Techni-Source Corporation *(AZ, NM)*
1839 S. Alma School Rd., Ste. 205, Mesa, AZ 85210
Phone: 480-775-6871
kevind@tscaz.com

Victory Sales
(ND, SD, NE, KS, MN, IA, MO, WI, IL, MI, IN, KY, OH, WV, W. PA)
4600 West 77th St., Suite 205,
Edina, MN 55435
Phone: 612-723-5469
Website: www.victorysales.com
info@victorysales.com

CentraMark Technical Sales Associates
(TX, OK, AR, LA)
P.O. Box 450877 Garland, TX 75045
Phone: 972-414-8188
Website: cmatex.com

Micro Technology Group
(CT, ME, MA, NH, RI, VT)
450 Chauncy St., Ste. 3, Mansfield, MA 02048
Phone: 508-337-3388
Website: www.m-t-g.com
sales@mtgelectronics.com

Zimmerman Sales *(Upstate NY)*
111 Marsh Rd. Office Bldg., Pittsford, NY 14534
Phone: 585-381-3186
Website: www.zimmermansales.com
sales@zimmermansales.com

ETSI, LLC. *(DC, VA, MD)*
3 Church Circle, Ste120, Annapolis, MD 21401
Phone: 410-974-9351
Website: etsi-llc.com

Southeastern Sales RF
(NC, SC, GA, TN, AL, MS, FL)
463 Rio Casa Dr. North, Indialantic, FL 32903
Phone: 321-591-0349
goliver@sesrf.com

International Sales Representatives

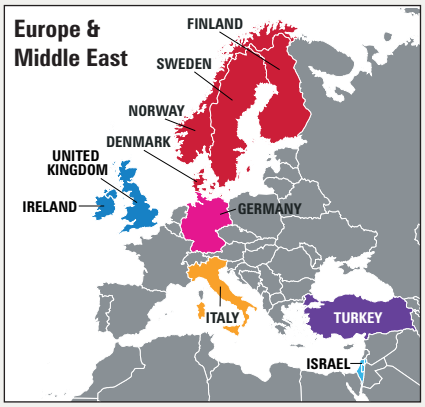

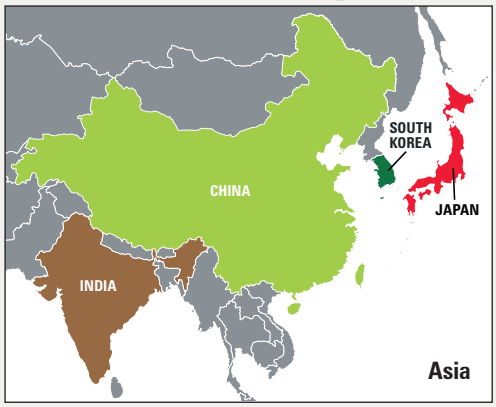

Expando Electronics AB
(Denmark / Finland / Norway / Sweden)
Svärdvägen 25A,
182 33 Danderyd, Sweden
Phone: +46 8 544 900 44
info@expando.se

Johnson Group Services (JGS)
(United Kingdom, Ireland)
The Ryder Cloisters
36, Evelyn Road Dunstable, Bedfordshire
LU5 4NG, United Kingdom
Phone: +44 (0) 1582 603439
dvjohnson@ssdi-power.co.uk

MES Manz Electronic Systeme OHG
(Germany)
Hauptstrasse 46/1,
D-74369 Löchgau, Germany
Phone: +49-7143-4031-0
Website: www.manz-electronic.de
rainer.manz@manz-electronic.de

Milano Brothers *(Italy)*
Via Enrico Fermi 79, 00146 Roma, Italy
Phone: +39.338.49.69.298
perugia@milanobro.com
USA Office: 380 SW 12th Ave.
Deerfield Beach, FL 33442
Phone: 954-420-5000

IMCA Elektronik ve Bilisim Sanayi ve Ticaret A.S. *(Turkey)*
Acibadem mah. Cecen sok. Akasya Acibadem AVM A Kule Blok no: 25 A/197, 34660 Uskudar Istanbul, Turkey
Phone: +90 216 504 07 87
Website: www.imca.com.tr
info@imca.com.tr

FMS Aerospace Ltd. *(Israel)*
12 Kehilat Venezia Street
Tel-Aviv 69400, Israel
Phone: 972-3-6094977
tal@fmsaerospace.com

Rironic Electronic Tech. Co., Ltd *(China)*
9th Floor, D Block, He Sheng Jing Guang Ctr.
No. 11, Tang Yan Road, Yan Ta District
XI'AN City, Shaan'Xi Province, China
Phone: +86-029-88377000
Website: www.rironic.com
steven_zhang@rironic.com

Irys Electronics *(India)*
261/2 Plot 4 & 5, Silver Oak Park
Baner Rd, Baner Pune 411045, India
Phone: 91 20 2729 1836
irys.india@iryselectronics.com

CBOL Corporation *(South Korea)*
19850 Plummer St. Chatsworth, CA 91311
Phone: 818-721-5510
jeff.kim@cbol.com

Sojitz Aerospace *(Japan)*
Marunouchi Trust Tower Main
4th Floor, 8-3 Marunouchi 1-chome, Chiyoda-Ku
Tokyo, Japan 100-0005
Phone: +81-(0)3-6870-7221
kodama-koyo@sojitz-aero.com

Techso *(Brazil)*
Rua Fradique Coutinho, 316 - Cj 41
Sao Paulo - SP, 05416-000 Brazil
(55-11) 3120 5968
techso@techso.com.br